SALES DRAWING SALES DRAWING SALES DRAWING

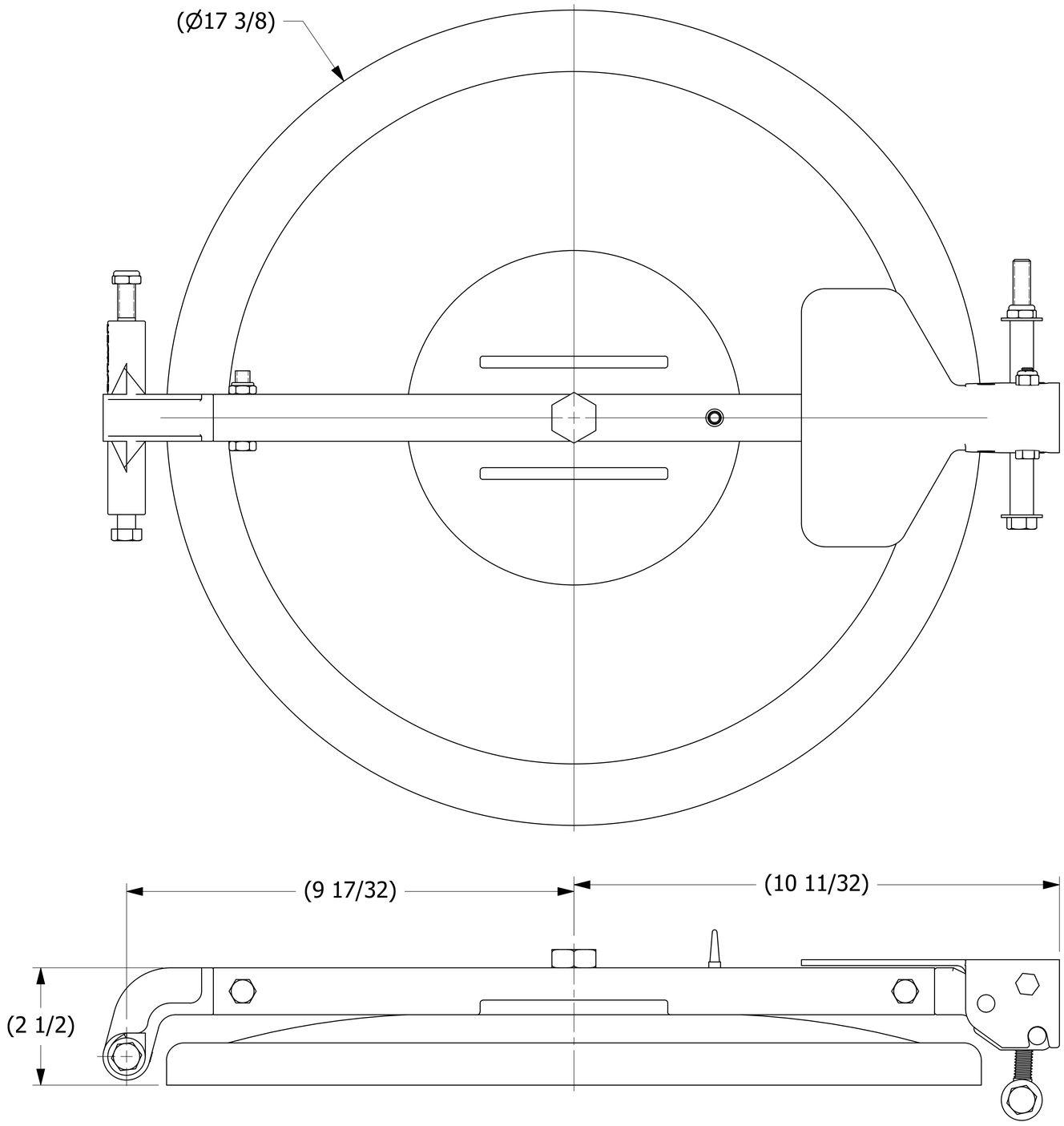

SALES DRAWING SALES DRAWING SALES DRAWING

REV	BY	DATE	REF #	PUB
F	CHL	3/29/21	202103291407	CHL

UNLESS OTHERWISE SPECIFIED
DIMENSIONAL TOLERANCES
FRACTIONAL: ±1/16
X.XX: ±.03
X.XXX: ±.015
ANGULAR: ±1°
DEBURR ALL SHARP EDGES.
ALL MACHINED SURFACES TO HAVE A 125 RMS FINISH UNLESS NOTED OTHERWISE.
THIRD ANGLE PROJECTION

DRAWN BY:	CLH
CHECKED BY:	
PROTOTYPE DATE:	1/29/2018
APPROVED FOR PRODUCTION BY:	CLH
PRODUCTION DATE:	9/12/2000
SIZE:	E
DRAWING #:	14410

SALCO PRODUCTS, INC.

PART NAME: CARBON BLACK HATCH COVER 16"

MATERIAL: ABS / ALUMINUM

PROJECT #: RD981008 | SHEET #: 1 OF 1 | SCALE: 1 : 1

PART #: PHC16THCBA

THIS PRINT, PROPERTY OF SALCO PRODUCTS INC, CONTAINS PROPRIETARY INFORMATION AND MUST NOT BE COPIED, REPRODUCED, OR USED DETRIMENTALLY TO OUR INTEREST.